New Product Release

1” MKIV Shuttle Valve Product Line

REV	DATE	DESCRIPTION	ORIGIN (issued by)	APPROVED
Rev A	03-13-2018	Document No: 120-031318-001	AP	SS

COMPANY PROPRIETARY INFORMATION

© 2014 Proserv. All Rights Reserved. This document contains confidential & proprietary information of Proserv. It is not to be in whole or in part, used, reproduced, disclosed, in any way made public or is it to be used for any purpose other than for which it was issued without express permission of Proserv. Proserv shall not be liable for any compensation, claims or damages resulting from any unauthorized use of this document or any information contained herein & you agree to defend & hold Proserv harmless with respect to any such compensation, claims or damages. This document & all information & data contained herein are subject to return upon demand. Legal action may follow any breach of this Copyright.

For more information:
Call (800) 469-8786
America.sales@proserv.com

Proserv
Gilmore Valve Facility
1231 Lumpkin Road
Houston, TX 77043

New Product Release

1” MKIV Shuttle Valve Product Line

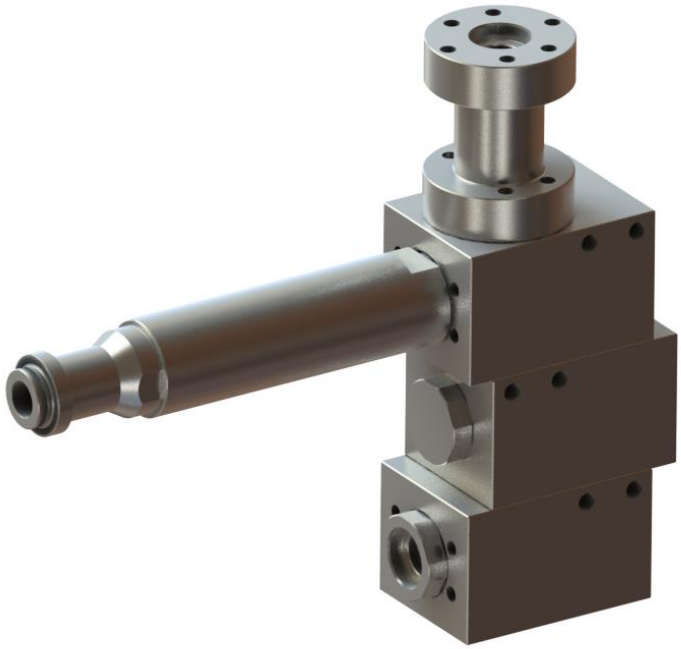

Proserv announces the new Gilmore 1” Mark IV Shuttle Valve product line for critical offshore and subsea applications. The 1” Mark IV Shuttle Valve product line establishes a new benchmark for reliability and serviceability in drilling control systems where redundant hydraulic pressure supplies are required.

Features and Benefits:

- Qualification exceeds API 16D requirements
  - Non Biased shuttle valves qualified to 2500 cycles at maximum flow conditions
  - Pressure and Spring Biased shuttle valves qualified to 1000 cycles at maximum flow conditions
- Shuttle metal seat no longer requires coining, simplifying on-site repairs
- All shuttle styles are hydraulically dampened
- Common stacked bodies can be readily reconfigured
- Fully serviceable shuttles and body seats can be completely redressed inline.
- Available configurations include Pressure biased, Spring biased, high interflow, low interflow, high drag, low drag options with customizable end connections and mounting provisions.
- Customizable single valve and stack valve assemblies available to suit application requirements
- Suitable for panel mounting or direct mounting
- U.S. Patent 9,915,275

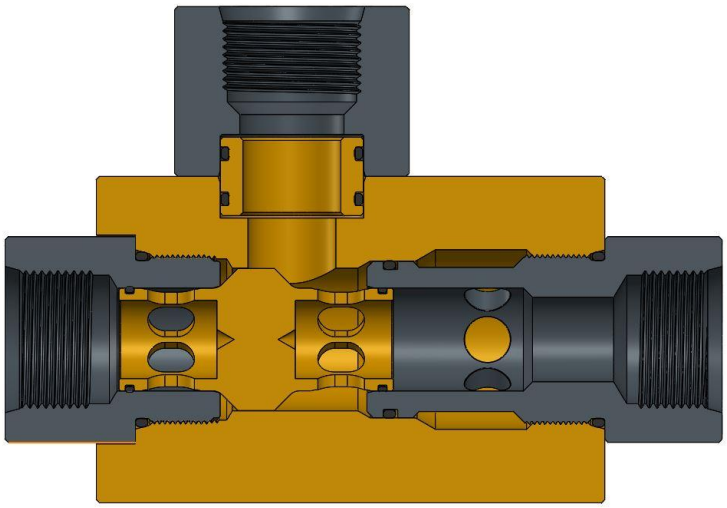

Figure 1. PN 29018: 1" MKIV Shuttle Valve, Inline, SAE, High Interflow, High Drag

Figure 2. PN 29019: 1" MKIV Shuttle Valve, Stack, 4 Inlets, Code 62, Pressure Biased, Low Interflow, High Drag

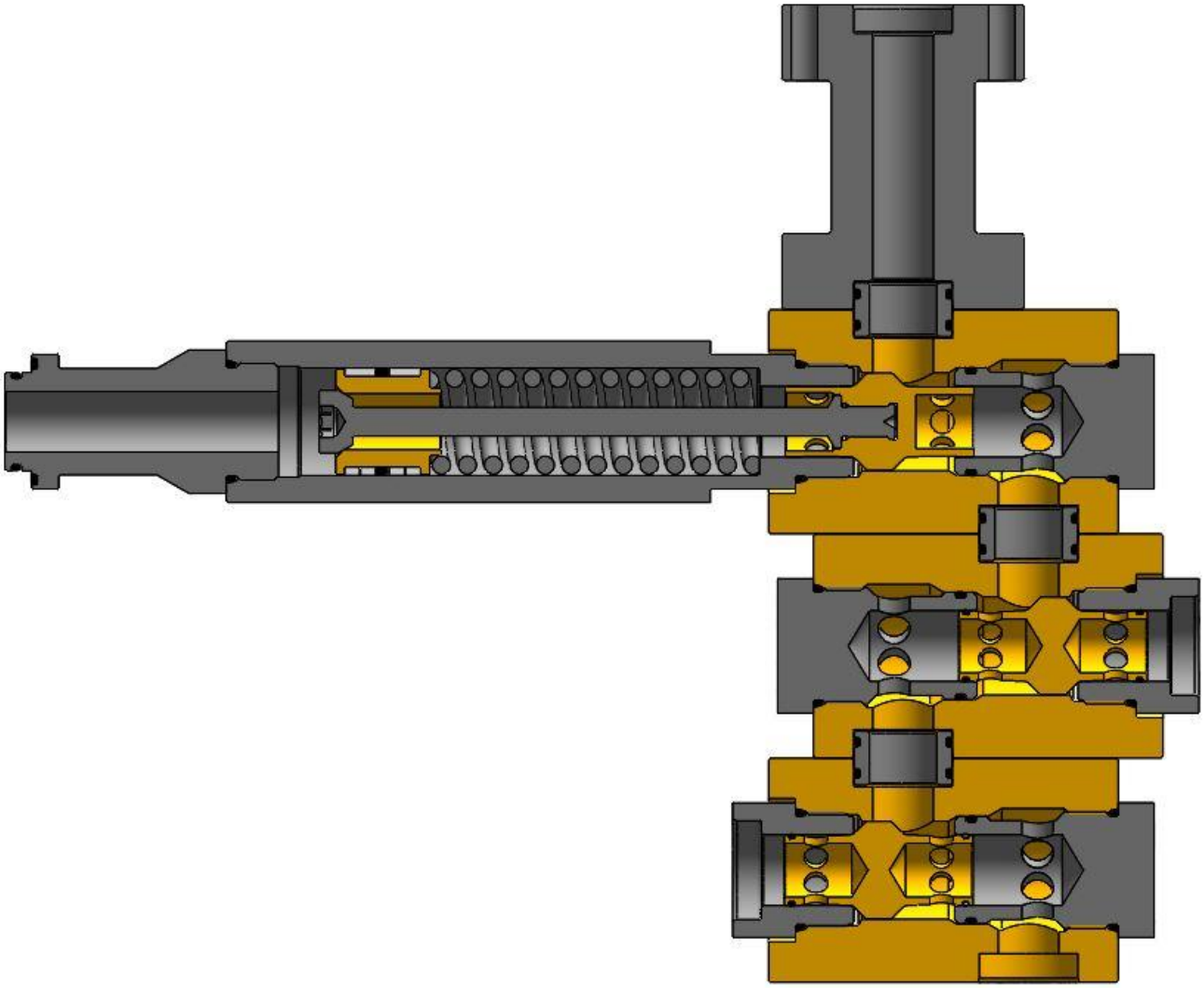

Proserv has exceeded API 16D requirements by qualifying the new 1" MKIV Shuttle Valve non-biased designs to multiple endurance qualification tests to 2500 cycles, at a starting flow rate of 175 gpm – and biased designs to 1000 cycles and 150 gpm – at 5000 psi, with 1% - 4% water glycol test fluid.

The new Proserv Gilmore 1" MKIV Shuttle Valves are now available for purchase. A few examples of typical assembly configurations are listed below for reference. Proserv Gilmore will create other customized 1" MKIV Shuttle valve configurations that are required.

Please contact Proserv Customer Service to request a quotation for the 1" MKIV Shuttle Valves listed below, or other configurations as required.

Table 1. Examples of New 1" MKIV Shuttle Valve Part Numbers:

Item	New Valve Description	Legacy PN Reference	New Valve PN	New Repair Kit PN	New Seal Kit PN
1	Valve, MKIV, 1" Inline, Code 62, Low Interflow, High Drag	27023-0.3	29012	29012 RK	29012 RK
2	Valve, MKIV, 1", 90 Degree, Code 62, Low Interflow, High Drag	N/A	29014	29014 RK	29014 RK
3	Valve, MKIV, 1" Inline, SAE, Pressure Biased, 400 psi Shift	28059	29015	29015 RK	29015 RK
4	Valve, MKIV, 1", Inline, SAE, Spring Biased	28135	29016	29016 RK	29016 RK
5	Valve, MKIV, 1", Inline, SAE, High Interflow, Low Drag	27020	29018	29018 RK	29018 RK
6	Valve, MKIV, 1" Stacked, 4 Inlets, Code 62 Seal Sub, Low Interflow, High Drag, Pressure Biased, 200 psi Seal	28306-3.3	29019	29019 RK	29019 RK
7	Valve, MKIV, 1" Inline, SAE, Pressure Biased, 200 psi Shift	27088	29020	29020 RK	29020 RK

Please note that Proserv will continue to support the legacy 1" MKIII Shuttle Valves, which have a different footprint than the new 1" MKIV Shuttle Valves.

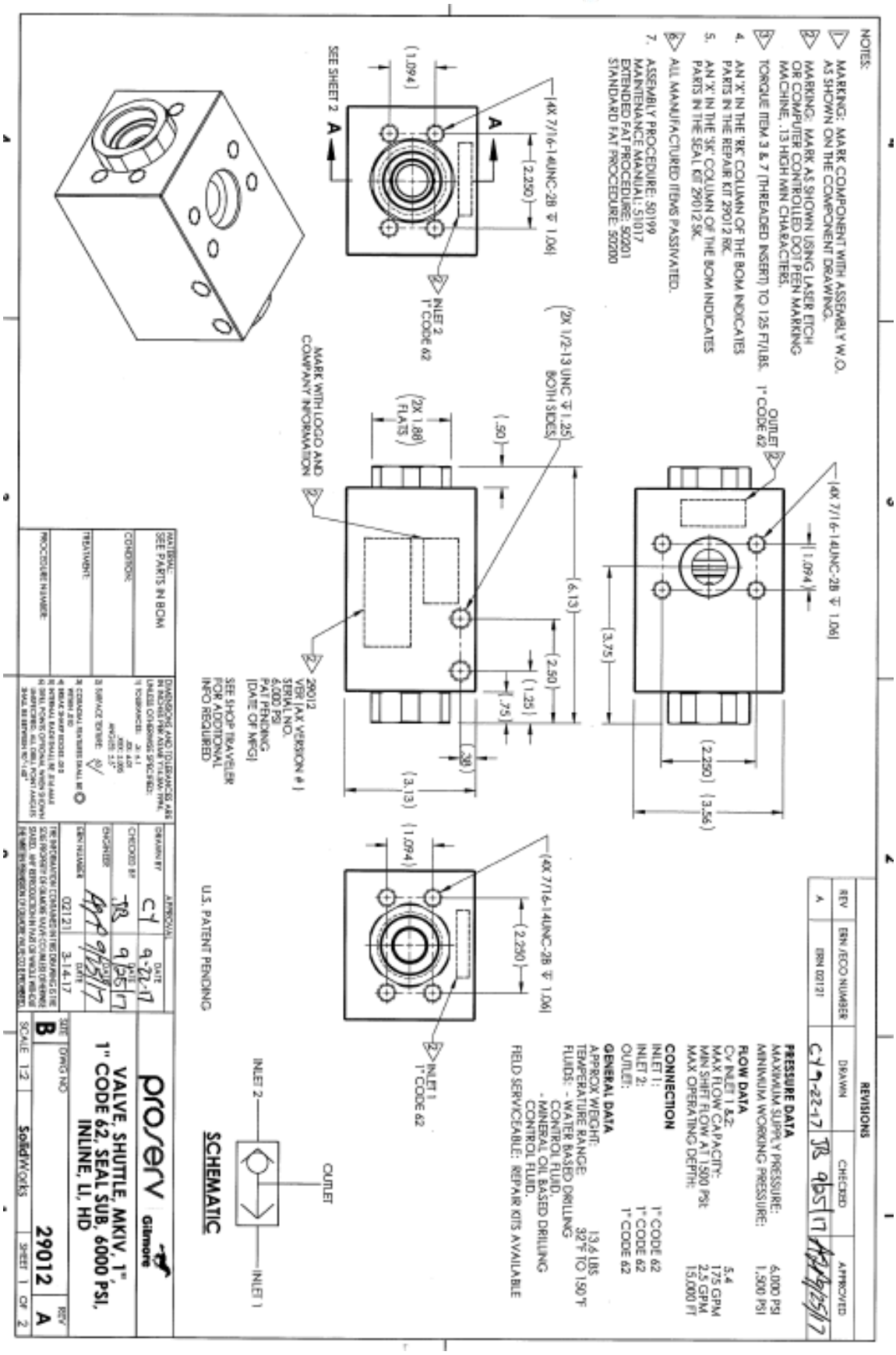
NOTES:
MARKING: MARK COMPONENT WITH ASSEMBLY W.O. AS SHOWN ON THE COMPONENT DRAWING.
MARKING: MARK AS SHOWN USING LASER ETCH OR COMPUTER CONTROLLED DOT PEEN MARKING MACHINE, .13 HIGH MIN CHARACTERS.
TORQUE ITEM 3 & 7 (THREADED INSERT) TO 125 FT/LBS.
4. AN 'X' IN THE 'RK' COLUMN OF THE BOM INDICATES PARTS IN THE REPAIR KIT 29012 RK.
5. AN 'X' IN THE 'SK' COLUMN OF THE BOM INDICATES PARTS IN THE SEAL KIT 29012 SK.
ALL MANUFACTURED ITEMS PASSIVATED.
7. ASSEMBLY PROCEDURE: 50199
MAINTENANCE MANUAL: 51017
EXTENDED FAT PROCEDURE: 50201
STANDARD FAT PROCEDURE: 50200
(4X 7/16-14UNC-2B ↧ 1.06)
(2.250)
(1.094)
SEE SHEET 2
A
INLET 2
1" CODE 62
(2X 1/2-13 UNC ↧ 1.25 BOTH SIDES)
(2X 1.88 FLATS)
(.50)
(6.13)
(2.50)
(1.25)
.75
.38
(3.13)
MARK WITH LOGO AND COMPANY INFORMATION
29012
VER (AX VERSION #)
SERIAL NO.
6,000 PSI
PAT PENDING
(DATE OF MFG)
SEE SHOP TRAVELER FOR ADDITIONAL INFO REQUIRED
OUTLET
1" CODE 62
(3.75)
(2.250)
(3.56)
INLET 1
1" CODE 62
U.S. PATENT PENDING
SCHEMATIC
INLET 2
OUTLET
INLET 1
REVISIONS
REV
ERN /ECO NUMBER
DRAWN
CHECKED
APPROVED
A
ERN 02121
PRESSURE DATA
MAXIMUM SUPPLY PRESSURE: 6,000 PSI
MINIMUM WORKING PRESSURE: 1,500 PSI
FLOW DATA
Cv INLET 1 &2: 5.4
MAX FLOW CAPACITY: 175 GPM
MIN SHIFT FLOW AT 1,500 PSI: 2.5 GPM
MAX OPERATING DEPTH: 15,000 FT
CONNECTION
INLET 1: 1" CODE 62
INLET 2: 1" CODE 62
OUTLET: 1" CODE 62
GENERAL DATA
APPROX WEIGHT: 13.6 LBS
TEMPERATURE RANGE: 32° F TO 150 °F
FLUIDS: - WATER BASED DRILLING CONTROL FLUID.
- MINERAL OIL BASED DRILLING CONTROL FLUID.
FIELD SERVICEABLE: REPAIR KITS AVAILABLE
MATERIAL: SEE PARTS IN BOM
CONDITION:
TREATMENT:
PROCEDURE NUMBER:
DIMENSIONS AND TOLERANCES ARE IN INCHES PER ASME Y14.5M-1994 UNLESS OTHERWISE SPECIFIED:
DRAWN BY
CHECKED BY
ENGINEER
ERN NUMBER
02121
APPROVAL
DATE
9-22-17
3-14-17
proserv Gilmore
VALVE, SHUTTLE, MKIV, 1" CODE 62, SEAL SUB, 6000 PSI, INLINE, LI, HD
DWG NO
29012
REV
A
SCALE 1:2
SolidWorks
SHEET 1 OF 2

BILL OF MATERIALS

ITEM NO	PART NUMBER	DESCRIPTION	MATERIAL	QTY	RK	SK
1	146825	BODY	A276 TP 316 (316 SS)	1		
2	146827	SHUTTLE, LI, HD	A276 UNS S21800 (NITRONIC 60)	1	X	
3	146832	INSERT, THREADED, 1" CODE 62	A276 UNS S21800 (NITRONIC 60)	1	X	
4	18100-052C	O-RING	BUNA-N 90	1	X	X
5	18100-619C	O-RING	BUNA-N 90	2	X	X
6	18100-026C	O-RING	BUNA-N 90	2	X	X
7	147338	ADAPTER, 1" CODE 62	A276 UNS S21800	1	X	

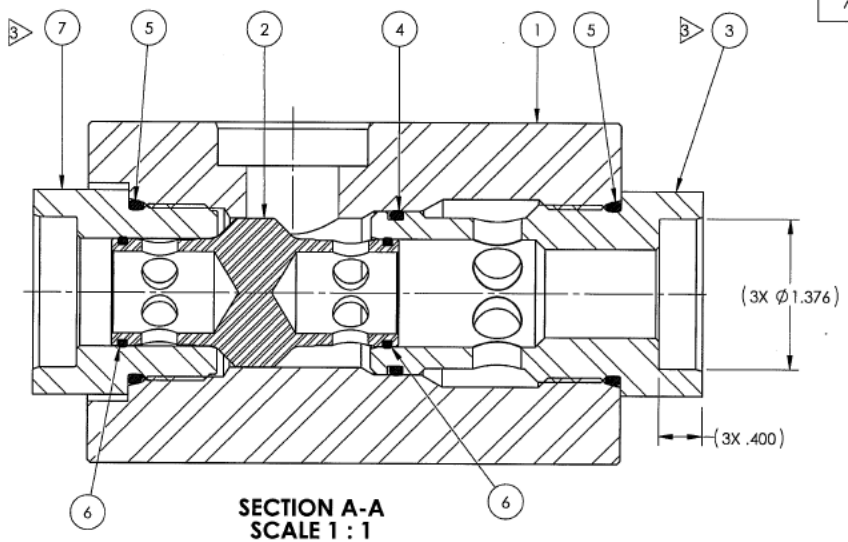

SECTION A-A
SCALE 1 : 1

proserv | Gilmore

SIZE	DWG NO	REV
B	29012	A

SCALE 1:2 | SolidWorks | SHEET 2 OF 2

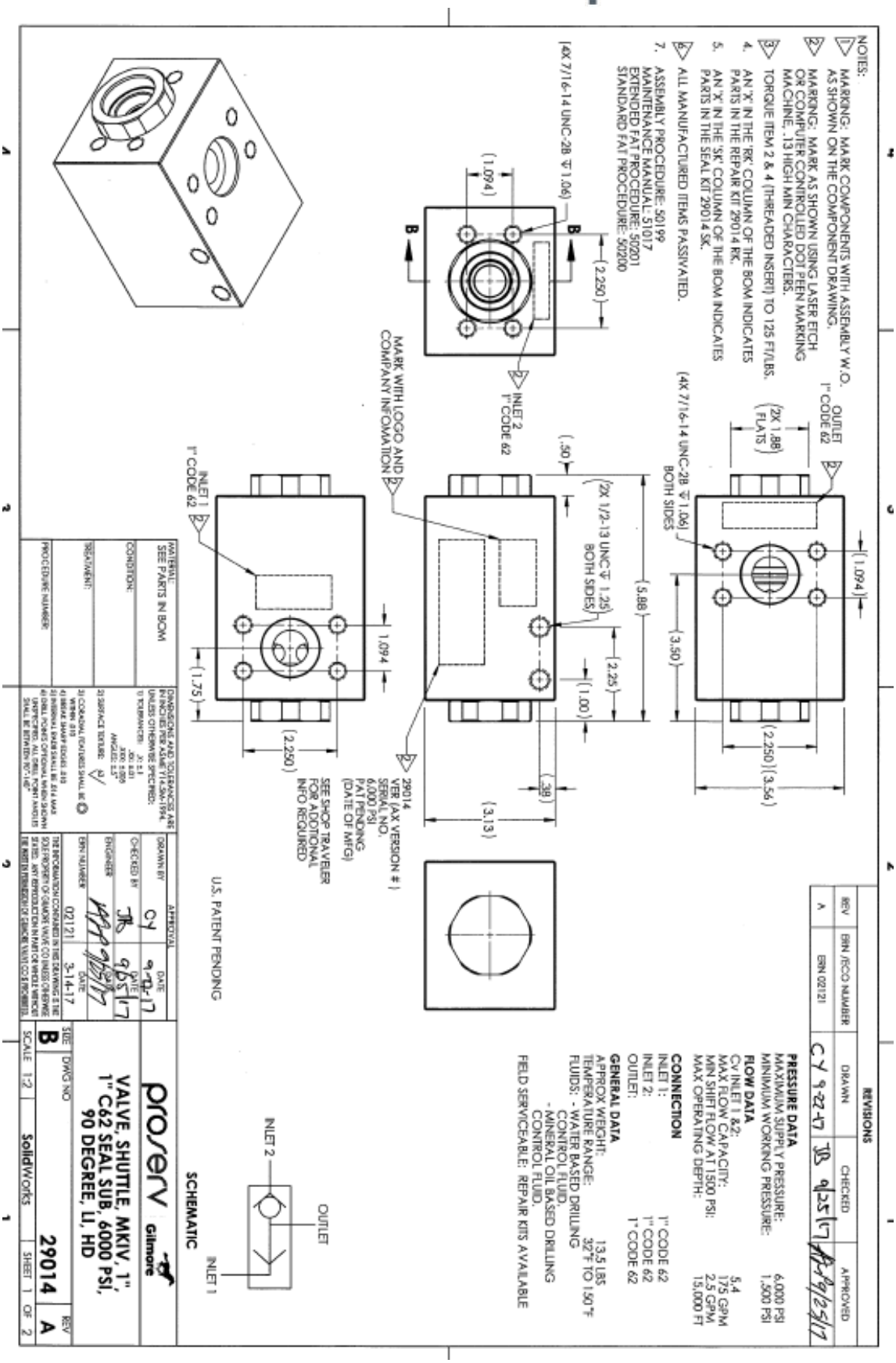
NOTES:
1. MARKING: MARK COMPONENTS WITH ASSEMBLY W.O. AS SHOWN ON THE COMPONENT DRAWING.
2. MARKING: MARK AS SHOWN USING LASER ETCH OR COMPUTER CONTROLLED DOT PEEN MARKING MACHINE. .13 HIGH MIN CHARACTERS.
3. TORQUE ITEM 2 & 4 (THREADED INSERT) TO 125 FT/LBS.
4. AN 'X' IN THE 'RK' COLUMN OF THE BOM INDICATES PARTS IN THE REPAIR KIT 29014 RK.
5. AN 'X' IN THE 'SK' COLUMN OF THE BOM INDICATES PARTS IN THE SEAL KIT 29014 SK.
6. ALL MANUFACTURED ITEMS PASSIVATED.
7. ASSEMBLY PROCEDURE: 50199
MAINTENANCE MANUAL: 51017
EXTENDED FAT PROCEDURE: 50201
STANDARD FAT PROCEDURE: 50200
OUTLET 1" CODE 62
INLET 2 1" CODE 62
INLET 1 1" CODE 62
MARK WITH LOGO AND COMPANY INFORMATION
29014 VER (AX VERSION #) SERIAL NO. 6,000 PSI PAT PENDING (DATE OF MFG)
SEE SHOP TRAVELER FOR ADDITIONAL INFO REQUIRED
U.S. PATENT PENDING
REVISIONS
PRESSURE DATA
MAXIMUM SUPPLY PRESSURE: 6,000 PSI
MINIMUM WORKING PRESSURE: 1,500 PSI
FLOW DATA
Cv INLET 1 &2: 5.4
MAX FLOW CAPACITY: 175 GPM
MIN SHIFT FLOW AT 1500 PSI: 2.5 GPM
MAX OPERATING DEPTH: 15,000 FT
CONNECTION
INLET 1: 1" CODE 62
INLET 2: 1" CODE 62
OUTLET: 1" CODE 62
GENERAL DATA
APPROX WEIGHT: 13.5 LBS
TEMPERATURE RANGE: 32°F TO 150°F
FLUIDS: - WATER BASED DRILLING CONTROL FLUID
- MINERAL OIL BASED DRILLING CONTROL FLUID.
FIELD SERVICEABLE: REPAIR KITS AVAILABLE
SCHEMATIC
INLET 2
OUTLET
INLET 1
VALVE, SHUTTLE, MKIV, 1", 1" C62 SEAL SUB, 6000 PSI, 90 DEGREE, LI, HD
29014
SCALE 1:2
SolidWorks
SHEET 1 OF 2

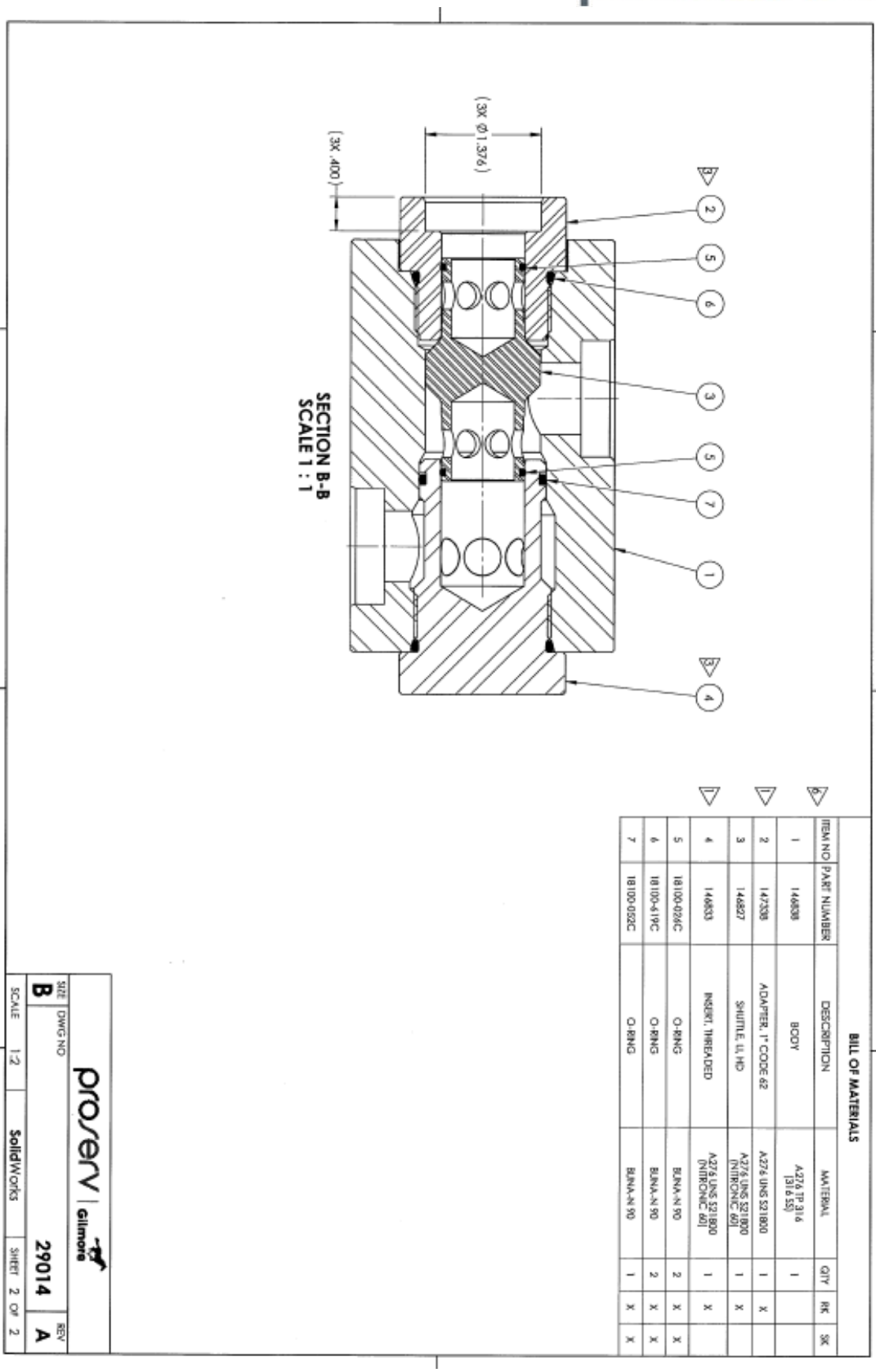
(3X Ø1.376)
(3X .400)
SECTION B-B
SCALE 1 : 1
BILL OF MATERIALS
ITEM NO | PART NUMBER | DESCRIPTION | MATERIAL | QTY | RK | SK
1 | 146838 | BODY | A276 TP 316 [316 SS] | 1 | | |
2 | 147308 | ADAPTER, 1" CODE 62 | A276 UNS S21800 | 1 | X | |
3 | 146827 | SHUTTLE, U, HD | A276 UNS S21800 (NITRONIC 60) | 1 | X | |
4 | 146833 | INSERT, THREADED | A276 UNS S21800 (NITRONIC 60) | 1 | X | |
5 | 18100-026C | O-RING | BUNA-N 90 | 2 | X | X
6 | 18100-619C | O-RING | BUNA-N 90 | 2 | X | X
7 | 18100-052C | O-RING | BUNA-N 90 | 1 | X | X
proserv | Gilmore
SIZE B
DWG NO 29014
REV A
SCALE 1:2
SolidWorks
SHEET 2 OF 2

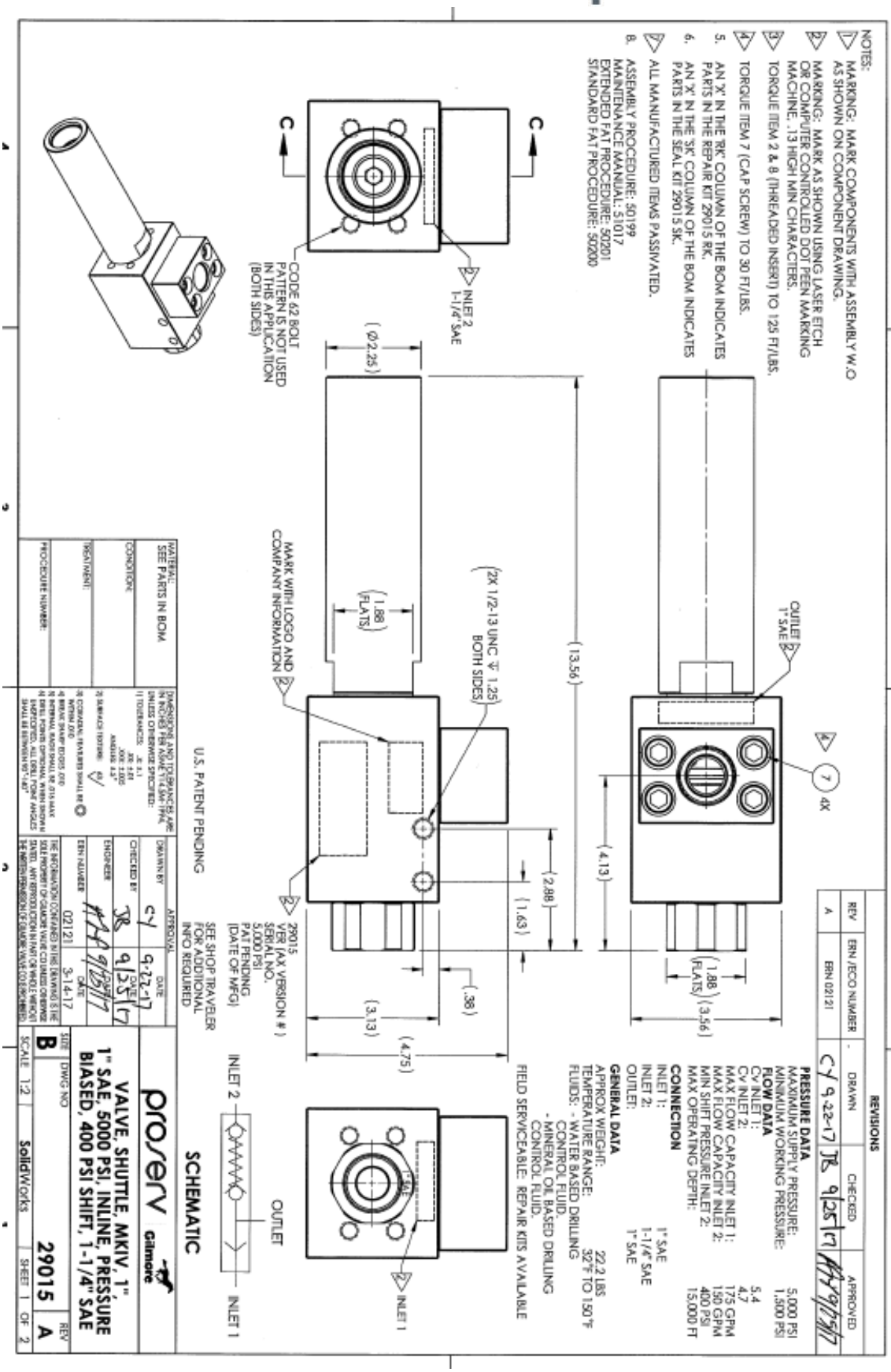
NOTES:
1. MARKING: MARK COMPONENTS WITH ASSEMBLY W.O AS SHOWN ON COMPONENT DRAWING.
2. MARKING: MARK AS SHOWN USING LASER ETCH OR COMPUTER CONTROLLED DOT PEEN MARKING MACHINE. .13 HIGH MIN CHARACTERS.
3. TORQUE ITEM 2 & 8 (THREADED INSERT) TO 125 FT/LBS.
4. TORQUE ITEM 7 (CAP SCREW) TO 30 FT/LBS.
5. AN 'X' IN THE 'RK' COLUMN OF THE BOM INDICATES PARTS IN THE REPAIR KIT 29015 RK.
6. AN 'X' IN THE 'SK' COLUMN OF THE BOM INDICATES PARTS IN THE SEAL KIT 29015 SK.
7. ALL MANUFACTURED ITEMS PASSIVATED.
8. ASSEMBLY PROCEDURE: 50199
MAINTENANCE MANUAL: 51017
EXTENDED FAT PROCEDURE: 50201
STANDARD FAT PROCEDURE: 50200
C
C
INLET 2
1-1/4" SAE
CODE 62 BOLT PATTERN IS NOT USED IN THIS APPLICATION (BOTH SIDES)
(Ø2.25)
(1.88 FLATS)
MARK WITH LOGO AND COMPANY INFORMATION
(2X 1/2-13 UNC ↧ 1.25 BOTH SIDES)
(13.56)
(2.88)
(1.63)
(.38)
(4.75)
(3.13)
29015
VER (AX VERSION #)
SERIAL NO.
5,000 PSI
PAT PENDING
(DATE OF MFG)
SEE SHOP TRAVELER FOR ADDITIONAL INFO REQUIRED
U.S. PATENT PENDING
OUTLET
1" SAE
4X
(4.13)
(1.88 FLATS)
(3.56)
INLET 1
INLET 2
OUTLET
INLET 1
SCHEMATIC
REVISIONS
REV
ERN / ECO NUMBER
DRAWN
CHECKED
APPROVED
A
ERN 02121
CY 9-22-17
JR 9/25/17
PRESSURE DATA
MAXIMUM SUPPLY PRESSURE: 5,000 PSI
MINIMUM WORKING PRESSURE: 1,500 PSI
FLOW DATA
CV INLET 1: 5.4
CV INLET 2: 4.7
MAX FLOW CAPACITY INLET 1: 175 GPM
MAX FLOW CAPACITY INLET 2: 150 GPM
MIN SHIFT PRESSURE INLET 2: 400 PSI
MAX OPERATING DEPTH: 15,000 FT
CONNECTION
INLET 1: 1" SAE
INLET 2: 1-1/4" SAE
OUTLET: 1" SAE
GENERAL DATA
APPROX WEIGHT: 22.2 LBS
TEMPERATURE RANGE: 32°F TO 150°F
FLUIDS: - WATER BASED DRILLING CONTROL FLUID.
- MINERAL OIL BASED DRILLING CONTROL FLUID.
FIELD SERVICEABLE: REPAIR KITS AVAILABLE
MATERIAL: SEE PARTS IN BOM
CONDITION:
TREATMENT:
PROCEDURE NUMBER:
DIMENSIONS AND TOLERANCES ARE IN INCHES PER ASME Y14.5M-1994 UNLESS OTHERWISE SPECIFIED:
APPROVAL
DRAWN BY CY 9-22-17
CHECKED BY JR 9/25/17
ENGINEER
ERN NUMBER 02121 3-14-17
THE INFORMATION CONTAINED IN THIS DRAWING IS THE SOLE PROPERTY OF GILMORE VALVE CO. UNLESS OTHERWISE STATED. ANY REPRODUCTION IN PART OR WHOLE WITHOUT THE WRITTEN PERMISSION OF GILMORE VALVE CO. IS PROHIBITED.
proserv Gilmore
VALVE, SHUTTLE, MKIV, 1" 1" SAE, 5000 PSI, INLINE, PRESSURE BIASED, 400 PSI SHIFT, 1-1/4" SAE
SIZE B
DWG NO 29015
REV A
SCALE 1:2
SolidWorks
SHEET 1 OF 2

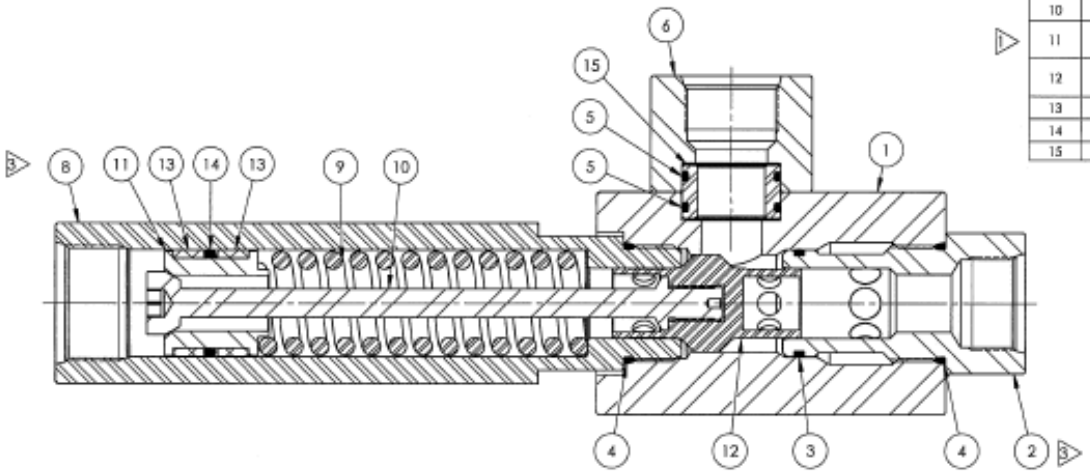

SECTION C-C
SCALE 1 : 1.5

BILL OF MATERIALS

ITEM NO	PART NUMBER	DESCRIPTION	MATERIAL	QTY	RK	SK
1	146825	BODY	A276 TP 316 (316 SS)	1		
2	147339	INSERT, THREADED, 1" SAE	A276 UNS S21800 (NITRONIC 60)	1	X	
3	18100-052C	O-RING	BUNA-N 90	1	X	X
4	18100-619C	O-RING	BUNA-N 90	2	X	X
5	18100-078C	O-RING	BUNA-N 90	2	X	X
6	153772	ADAPTER, OUTLET, 1" SAE	A276 TP 316L	1		
7	18324-014	SHCS, 7/16-14 UNC X 1.75	A286 GR660	4		
8	153773	ADAPTER, PBS	A276 UNS S21800 (NITRONIC 60)	1	X	
9	27969	SPRING, COMPRESSION	ELGILOY (UNS R30003)	1		
10	146835	SPRING ROD	8637 ALLOY NO7718	1	X	
11	147244	PISTON, PRESSURE BIASED	A276 UNS S21800 (NITRONIC 60)	1	X	
12	146837	SHUTTLE, PRESSURE BIASED	A276 UNS S21800 (NITRONIC 60)	1	X	
13	146831	WEARBAND, PRESSURE BIASED	DELRIN AF	2	X	X
14	18100-108C	O-RING	BUNA-N 90	1	X	X
15	157788	INSERT, SEAL SUB	A276 TP 316L	1		

SIZE B	DWG NO 29015		REV A
SCALE 1:4	SolidWorks	SHEET 2 OF 2	

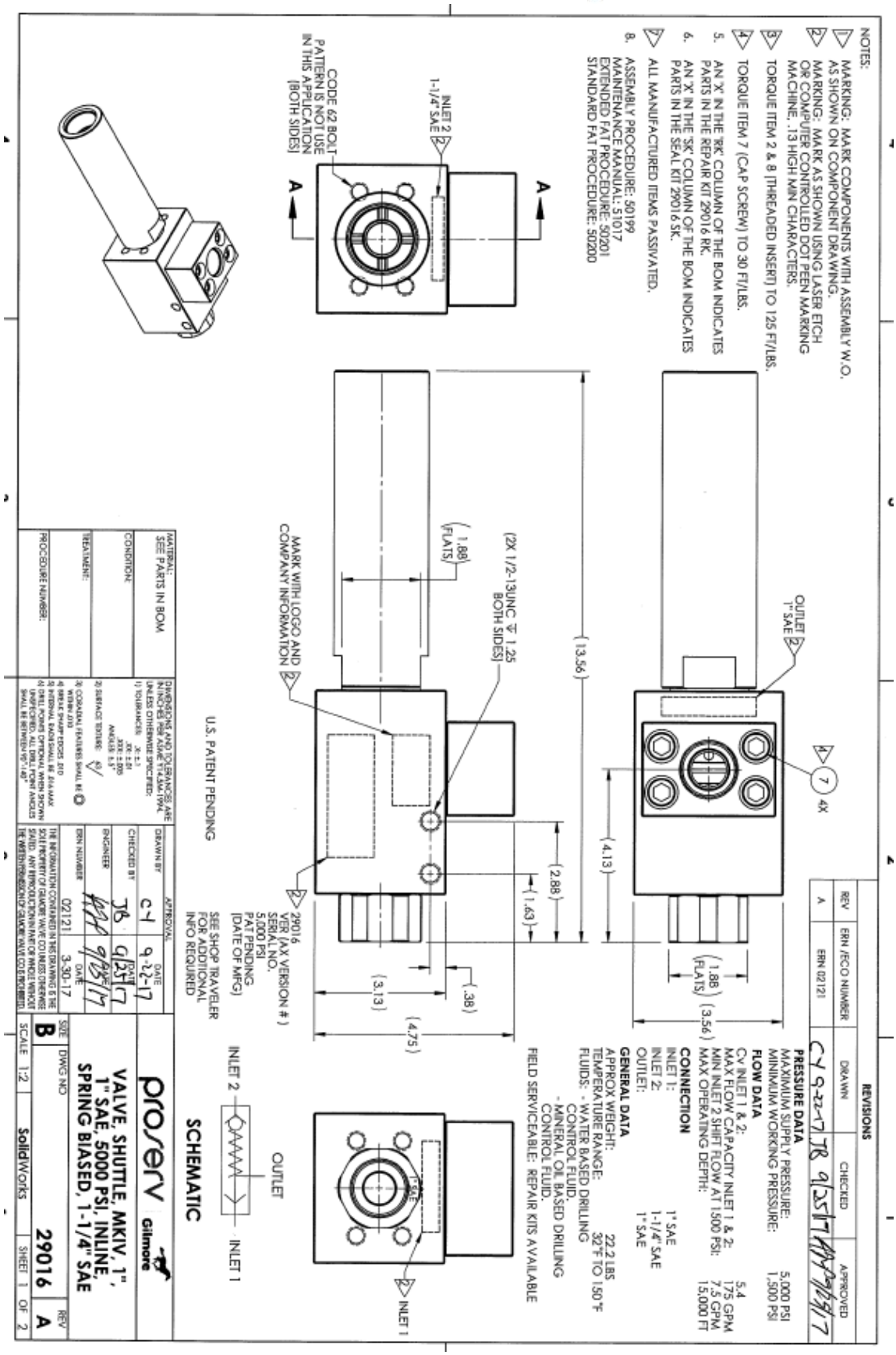
NOTES:
1. MARKING: MARK COMPONENTS WITH ASSEMBLY W.O. AS SHOWN ON COMPONENT DRAWING.
2. MARKING: MARK AS SHOWN USING LASER ETCH OR COMPUTER CONTROLLED DOT PEEN MARKING MACHINE, .13 HIGH MIN CHARACTERS.
3. TORQUE ITEM 2 & 8 (THREADED INSERT) TO 125 FT/LBS.
4. TORQUE ITEM 7 (CAP SCREW) TO 30 FT/LBS.
5. AN 'X' IN THE 'RK' COLUMN OF THE BOM INDICATES PARTS IN THE REPAIR KIT 29016 RK.
6. AN 'X' IN THE 'SK' COLUMN OF THE BOM INDICATES PARTS IN THE SEAL KIT 29016 SK.
7. ALL MANUFACTURED ITEMS PASSIVATED.
8. ASSEMBLY PROCEDURE: 50199
MAINTENANCE MANUAL: 51017
EXTENDED FAT PROCEDURE: 50201
STANDARD FAT PROCEDURE: 50200
INLET 2
1-1/4" SAE
CODE 62 BOLT PATTERN IS NOT USE IN THIS APPLICATION (BOTH SIDES)
A
A
OUTLET
1" SAE
7
4X
(2X 1/2-13UNC ↧ 1.25 BOTH SIDES)
1.88 FLATS
13.56
4.13
2.88
1.63
.38
3.13
4.75
1.88 FLATS
3.56
MARK WITH LOGO AND COMPANY INFORMATION
29016
VER (AX VERSION #)
SERIAL NO.
5,000 PSI
PAT PENDING
(DATE OF MFG)
SEE SHOP TRAVELER FOR ADDITIONAL INFO REQUIRED
U.S. PATENT PENDING
INLET 1
REVISIONS
REV
ERN /ECO NUMBER
DRAWN
CHECKED
APPROVED
A
ERN 02121
CY 9-22-17
JB 9/25/17
PRESSURE DATA
MAXIMUM SUPPLY PRESSURE: 5,000 PSI
MINIMUM WORKING PRESSURE: 1,500 PSI
FLOW DATA
Cv INLET 1 & 2: 5.4
MAX FLOW CAPACITY INLET 1 & 2: 175 GPM
MIN INLET 2 SHIFT FLOW AT 1,500 PSI: 7.5 GPM
MAX OPERATING DEPTH: 15,000 FT
CONNECTION
INLET 1: 1" SAE
INLET 2: 1-1/4" SAE
OUTLET: 1" SAE
GENERAL DATA
APPROX WEIGHT: 22.2 LBS
TEMPERATURE RANGE: 32°F TO 150°F
FLUIDS: - WATER BASED DRILLING CONTROL FLUID.
- MINERAL OIL BASED DRILLING CONTROL FLUID.
FIELD SERVICEABLE: REPAIR KITS AVAILABLE
INLET 1
INLET 2
OUTLET
INLET 1
SCHEMATIC
MATERIAL: SEE PARTS IN BOM
CONDITION:
TREATMENT:
PROCEDURE NUMBER:
DIMENSIONS AND TOLERANCES ARE IN INCHES AND TOLERANCES ARE TYPICAL UNLESS OTHERWISE SPECIFIED:
1) TOLERANCES: .X ±.3 .XX ±.01 .XXX ±.005 ANGLES ±.5°
2) SURFACE TEXTURE: 63
3) COSMETIC FEATURES SHALL BE WITHIN .010
4) MATERIAL HARDNESS SHALL BE 60 HRC MAX
5) MATERIAL HARDNESS SHALL BE 60 HRC MAX
6) DRILL POINTS OPTIONAL WHEN SHOWN UNSPECIFIED. ALL DRILL POINT ANGLES SHALL BE BETWEEN 90°-140°
DRAWN BY C-Y 9-22-17
CHECKED BY JB 9/25/17
ENGINEER 9/25/17
ERN NUMBER 02121
APPROVAL
DATE
THE INFORMATION CONTAINED IN THIS DRAWING IS THE SOLE PROPERTY OF GILMORE VALVE CO LLC. ANY REPRODUCTION IN PART OR WHOLE WITHOUT THE WRITTEN PERMISSION OF GILMORE VALVE CO LLC IS PROHIBITED.
proserv Gilmore
VALVE, SHUTTLE, MKIV, 1", 1" SAE, 5000 PSI, INLINE, SPRING BIASED, 1-1/4" SAE
SIZE B
DWG NO 29016
REV A
SCALE 1:2
SolidWorks
SHEET 1 OF 2

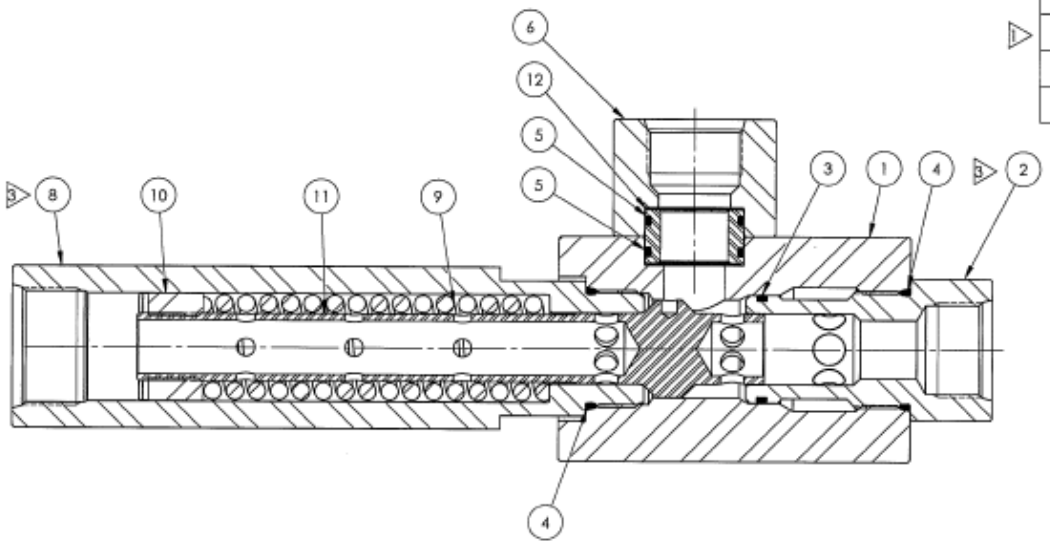

SECTION A-A
SCALE 1 : 1.5

BILL OF MATERIALS

ITEM NO	PART NUMBER	DESCRIPTION	MATERIAL	QTY	RK	SK
1	146825	BODY	A276 TP 316 (316 SS)	1		
2	147339	INSERT, THREADED, 1" SAE	A276 UNS S21800 (NITRONIC 60)	1	X	
3	18100-052C	O-RING	BUNA-N 90	1	X	X
4	18100-619C	O-RING	BUNA-N 90	2	X	X
5	18100-078C	O-RING	BUNA-N 90	2	X	X
6	153772	ADAPTER, OUTLET, 1" SAE	A276 TP 316L	1		
7	18224-014	SHCS, 7/16-14 UNC X 1.75	A286 GR660	4		
8	153773	ADAPTER, PBS	A276 UNS S21800 (NITRONIC 60)	1	X	
9	27092	SPRING, COMPRESSION	A313 TP 316 (SS316)	1		
10	27976	NUT, GUIDE 1" SPRING BIASED	B169 C61499	1	X	
11	153774	SHUTTLE, SPRING BIASED	A276 UNS S21800 (NITRONIC 60)	1	X	
12	157788	INSERT, SEAL SUB	A276 TP 316L	1		

proserv | Gilmore

SIZE	DWG NO	REV
B	29016	A

SCALE 1:2 | SolidWorks | SHEET 2 OF 2

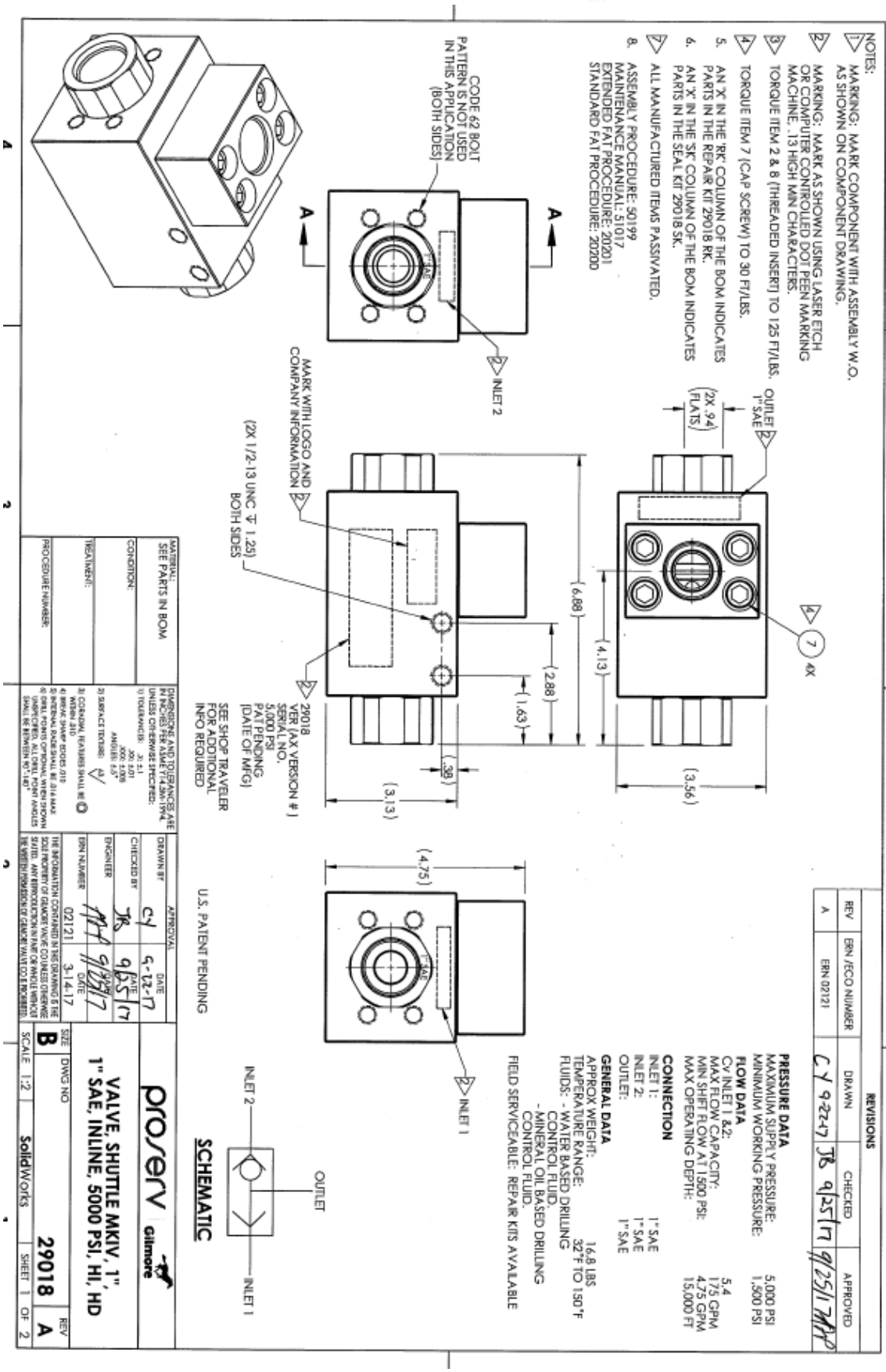
NOTES:
1. MARKING: MARK COMPONENT WITH ASSEMBLY W.O. AS SHOWN ON COMPONENT DRAWING.
2. MARKING: MARK AS SHOWN USING LASER ETCH OR COMPUTER CONTROLLED DOT PEEN MARKING MACHINE. .13 HIGH MIN CHARACTERS.
3. TORQUE ITEM 2 & 8 (THREADED INSERT) TO 125 FT/LBS.
4. TORQUE ITEM 7 (CAP SCREW) TO 30 FT/LBS.
5. AN 'X' IN THE 'RK' COLUMN OF THE BOM INDICATES PARTS IN THE REPAIR KIT 29018 RK.
6. AN 'X' IN THE 'SK' COLUMN OF THE BOM INDICATES PARTS IN THE SEAL KIT 29018 SK.
7. ALL MANUFACTURED ITEMS PASSIVATED.
8. ASSEMBLY PROCEDURE: 50199
MAINTENANCE MANUAL: 51017
EXTENDED FAT PROCEDURE: 20201
STANDARD FAT PROCEDURE: 20200
CODE 62 BOLT PATTERN IS NOT USED IN THIS APPLICATION (BOTH SIDES)
INLET 2
OUTLET 1" SAE
(2X .94 FLATS)
4X
MARK WITH LOGO AND COMPANY INFORMATION
(2X 1/2-13 UNC ↧ 1.25) BOTH SIDES
29018 VER (AX VERSION #) SERIAL NO. 5,000 PSI PATENDING (DATE OF MFG)
SEE SHOP TRAVELER FOR ADDITIONAL INFO REQUIRED
(6.88)
(4.13)
(2.88)
(1.63)
(.38)
(3.13)
(3.56)
(4.75)
INLET 1
U.S. PATENT PENDING
SCHEMATIC
INLET 2
OUTLET
INLET 1
REVISIONS
REV
ERN /ECO NUMBER
DRAWN
CHECKED
APPROVED
A
ERN 02121
CY 9-22-17
JB 9/25/17
9/25/17
PRESSURE DATA
MAXIMUM SUPPLY PRESSURE: 5,000 PSI
MINIMUM WORKING PRESSURE: 1,500 PSI
FLOW DATA
Cv INLET 1 &2: 5.4
MAX FLOW CAPACITY: 175 GPM
MIN SHIFT FLOW AT 1500 PSI: 4.75 GPM
MAX OPERATING DEPTH: 15,000 FT
CONNECTION
INLET 1: 1" SAE
INLET 2: 1" SAE
OUTLET: 1" SAE
GENERAL DATA
APPROX WEIGHT: 16.8 LBS
TEMPERATURE RANGE: 32°F TO 150°F
FLUIDS: - WATER BASED DRILLING CONTROL FLUID.
- MINERAL OIL BASED DRILLING CONTROL FLUID.
FIELD SERVICEABLE: REPAIR KITS AVAILABLE
MATERIAL: SEE PARTS IN BOM
CONDITION:
TREATMENT:
PROCEDURE NUMBER:
DIMENSIONS AND TOLERANCES ARE IN INCHES PER ASME Y14.5M-1994 UNLESS OTHERWISE SPECIFIED:
1) TOLERANCES: .X: ±.1 .XX: ±.03 .XXX: ±.009 ANGLES: ±.5°
2) SURFACE TEXTURE: 63
3) CORNERS, FEATURES SHALL BE
4) BREAK SHARP EDGES .015
5) INTERNAL RADII SHALL BE .014 MAX
6) DRILL POINTS OPTIONAL WHEN SHOWN UNSPECIFIED. ALL DRILL POINT ANGLES SHALL BE BETWEEN 90°-140°
APPROVAL
DRAWN BY CY 9-22-17
CHECKED BY JB 9/25/17
ENGINEER 9/25/17
ERN NUMBER 02121
DATE 3-14-17
THE INFORMATION CONTAINED IN THIS DRAWING IS THE SOLE PROPERTY OF GILMORE VALVE CO UNLESS OTHERWISE STATED. ANY REPRODUCTION IN PART OR WHOLE WITHOUT THE WRITTEN PERMISSION OF GILMORE VALVE CO IS PROHIBITED.
proserv Gilmore
VALVE, SHUTTLE MKIV, 1"
1" SAE, INLINE, 5000 PSI, HI, HD
SIZE B
DWG NO 29018
REV A
SCALE 1:2
SolidWorks
SHEET 1 OF 2

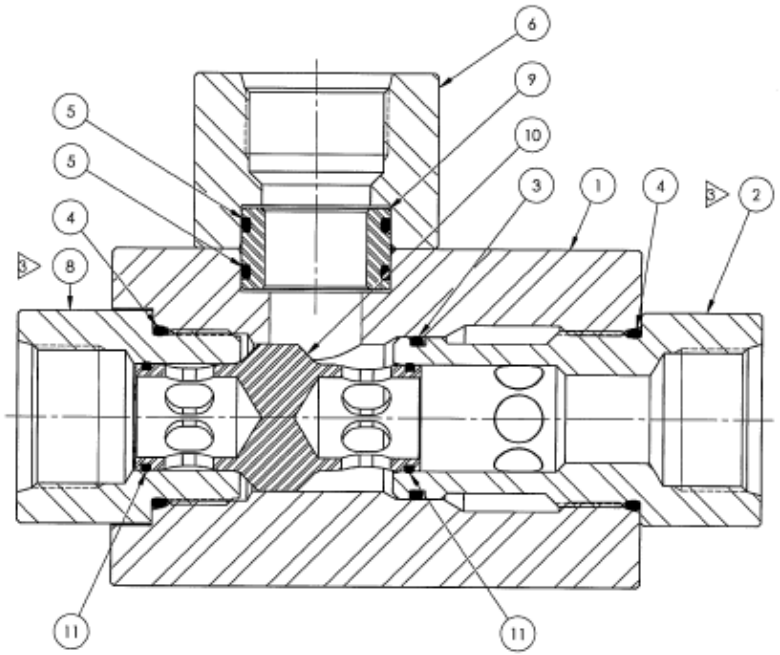

SECTION A-A
SCALE 1 : 1

BILL OF MATERIALS

ITEM NO	PART NUMBER	DESCRIPTION	MATERIAL	QTY	RK	SK
1	146825	BODY	A276 TP 316 (316 SS)	1		
2	147339	INSERT, THREADED, 1" SAE	A276 UNS S21800 (NITRONIC 60)	1	X	
3	18100-052C	O-RING	BUNA-N 90	1	X	X
4	18100-619C	O-RING	BUNA-N 90	2	X	X
5	18100-078C	O-RING	BUNA-N 90	2	X	X
6	153772	ADAPTER, OUTLET, 1" SAE	A276 TP 316L	1		
7	18224-014	SHCS, 7/16-14 UNC X 1.75	A286 GR660	4		
8	147336	ADAPTER, 1" SAE	A276 UNS S21800	1	X	
9	157788	INSERT, SEAL SUB	A276 TP 316L	1		
10	146826	SHUTTLE, 1" MK IV, HIGH DRAG, HIGH INTERFLOW	A276 UNS S21800 (NITRONIC 60)	1	X	
11	18100-026C	O-RING	BUNA-N 90	2	X	X

proserv | Gilmore

SIZE	DWG NO	REV
B	29018	A
SCALE 1:2	SolidWorks	SHEET 2 OF 2

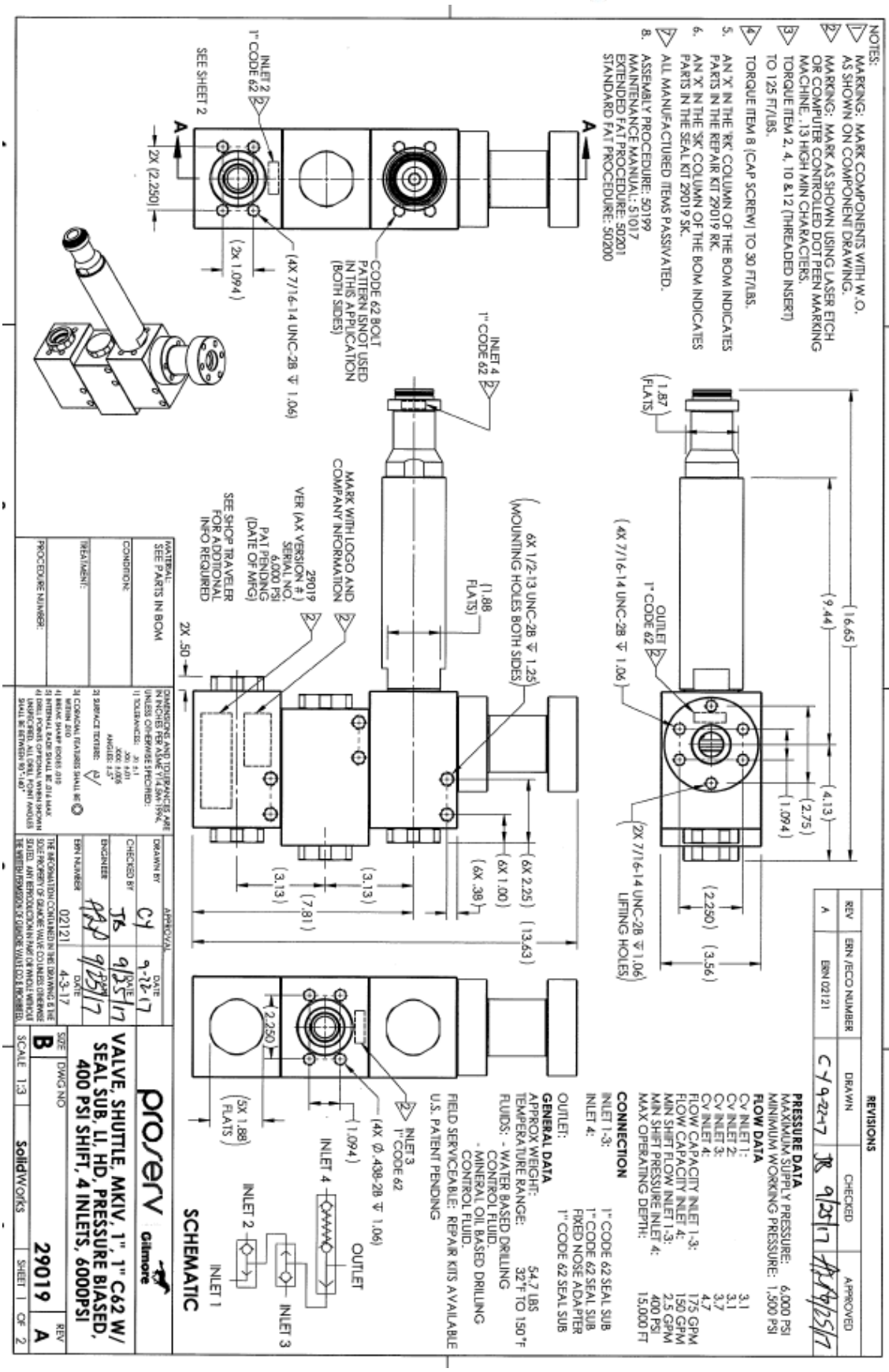
NOTES:
1. MARKING: MARK COMPONENTS WITH W.O. AS SHOWN ON COMPONENT DRAWING.
2. MARKING: MARK AS SHOWN USING LASER ETCH OR COMPUTER CONTROLLED DOT PEEN MARKING MACHINE. .13 HIGH MIN CHARACTERS.
3. TORQUE ITEM 2, 4, 10 & 12 (THREADED INSERT) TO 125 FT/LBS.
4. TORQUE ITEM 8 (CAP SCREW) TO 30 FT/LBS.
5. AN 'X' IN THE 'RK' COLUMN OF THE BOM INDICATES PARTS IN THE REPAIR KIT 29019 RK.
6. AN 'X' IN THE 'SK' COLUMN OF THE BOM INDICATES PARTS IN THE SEAL KIT 29019 SK.
7. ALL MANUFACTURED ITEMS PASSIVATED.
8. ASSEMBLY PROCEDURE: 50199
MAINTENANCE MANUAL: 51017
EXTENDED FAT PROCEDURE: 50201
STANDARD FAT PROCEDURE: 50200
INLET 2
1" CODE 62
SEE SHEET 2
2X (2.250)
(2x 1.094)
(4X 7/16-14 UNC-2B ↧ 1.06)
CODE 62 BOLT PATTERN ISNOT USED IN THIS APPLICATION (BOTH SIDES)
INLET 4
1" CODE 62
(1.87 FLATS)
(16.65)
(9.44)
(4.13)
(2.75)
(1.094)
(4X 7/16-14 UNC-2B ↧ 1.06)
OUTLET
1" CODE 62
(2X 7/16-14 UNC-2B ↧ 1.06)
LIFTING HOLES)
(2.250)
(3.56)
6X 1/2-13 UNC-2B ↧ 1.25)
MOUNTING HOLES BOTH SIDES)
(1.88 FLATS)
MARK WITH LOGO AND COMPANY INFORMATION
29019
VER (AX VERSION #)
SERIAL NO.
6,000 PSI
PAT PENDING
(DATE OF MFG)
SEE SHOP TRAVELER FOR ADDITIONAL INFO REQUIRED
2X .50
(6X 2.25)
(13.63)
(6X 1.00)
(6X .38)
(3.13)
(3.13)
(7.81)
(2.250)
(5X 1.88 FLATS)
INLET 3
1" CODE 62
(4X Ø .438-28 ↧ 1.06)
(1.094)
INLET 4
OUTLET
INLET 2
INLET 3
INLET 1
SCHEMATIC
REVISIONS
REV
ERN /ECO NUMBER
DRAWN
CHECKED
APPROVED
A
ERN 02121
CY 9-22-17
JB 9/25/17
PRESSURE DATA
MAXIMUM SUPPLY PRESSURE: 6,000 PSI
MINIMUM WORKING PRESSURE: 1,500 PSI
FLOW DATA
CV INLET 1: 3.1
CV INLET 2: 3.1
CV INLET 3: 3.7
CV INLET 4: 4.7
FLOW CAPACITY INLET 1-3: 175 GPM
FLOW CAPACITY INLET 4: 150 GPM
MIN SHIFT FLOW INLET 1-3: 2.5 GPM
MIN SHIFT PRESSURE INLET 4: 400 PSI
MAX OPERATING DEPTH: 15,000 FT
CONNECTION
INLET 1-3: 1" CODE 62 SEAL SUB
INLET 4: 1" CODE 62 SEAL SUB
FIXED NOSE ADAPTER
1" CODE 62 SEAL SUB
OUTLET:
GENERAL DATA
APPROX WEIGHT: 54.7 LBS
TEMPERATURE RANGE: 32°F TO 150°F
FLUIDS: - WATER BASED DRILLING CONTROL FLUID.
- MINERAL OIL BASED DRILLING CONTROL FLUID.
FIELD SERVICEABLE: REPAIR KITS AVAILABLE
U.S. PATENT PENDING
MATERIAL: SEE PARTS IN BOM
CONDITION:
TREATMENT:
PROCEDURE NUMBER:
DIMENSIONS AND TOLERANCES ARE IN INCHES AND MILLIMETERS UNLESS OTHERWISE SPECIFIED:
1) TOLERANCES: .X ±.01 .XX ±.005 .XXX ±.005 ANGLES: ±.5°
2) SURFACE TEXTURE:
3) CORNERS, FEATURES SHALL BE
4) MAX. VALVE SIZE: 1000 GPM WITHIN .010
5) MATERIAL MAX. HARDNESS: 31 HRC
6) DRILL POINTS OPTIONAL WHEN SHOWN UNSPECIFIED. ALL DRILL POINT ANGLES SHALL BE BETWEEN 90°-140°
APPROVAL
DRAWN BY CY 9-22-17
CHECKED BY JB 9/25/17
ENGINEER 9/25/17
ERN NUMBER 02121
DATE 4-3-17
THE INFORMATION CONTAINED IN THE DRAWING IS THE SOLE PROPERTY OF GILMORE VALVE CO. UNLESS OTHERWISE STATED. ANY REPRODUCTION IN PART OR WHOLE WITHOUT THE WRITTEN PERMISSION OF GILMORE VALVE CO. IS PROHIBITED.
proserv Gilmore
VALVE, SHUTTLE, MKIV, 1", 1" C62 W/ SEAL SUB, LI, HD, PRESSURE BIASED, 400 PSI SHIFT, 4 INLETS, 6000PSI
SIZE B
DWG NO 29019
REV A
SCALE 1:3
SolidWorks
SHEET 1 OF 2

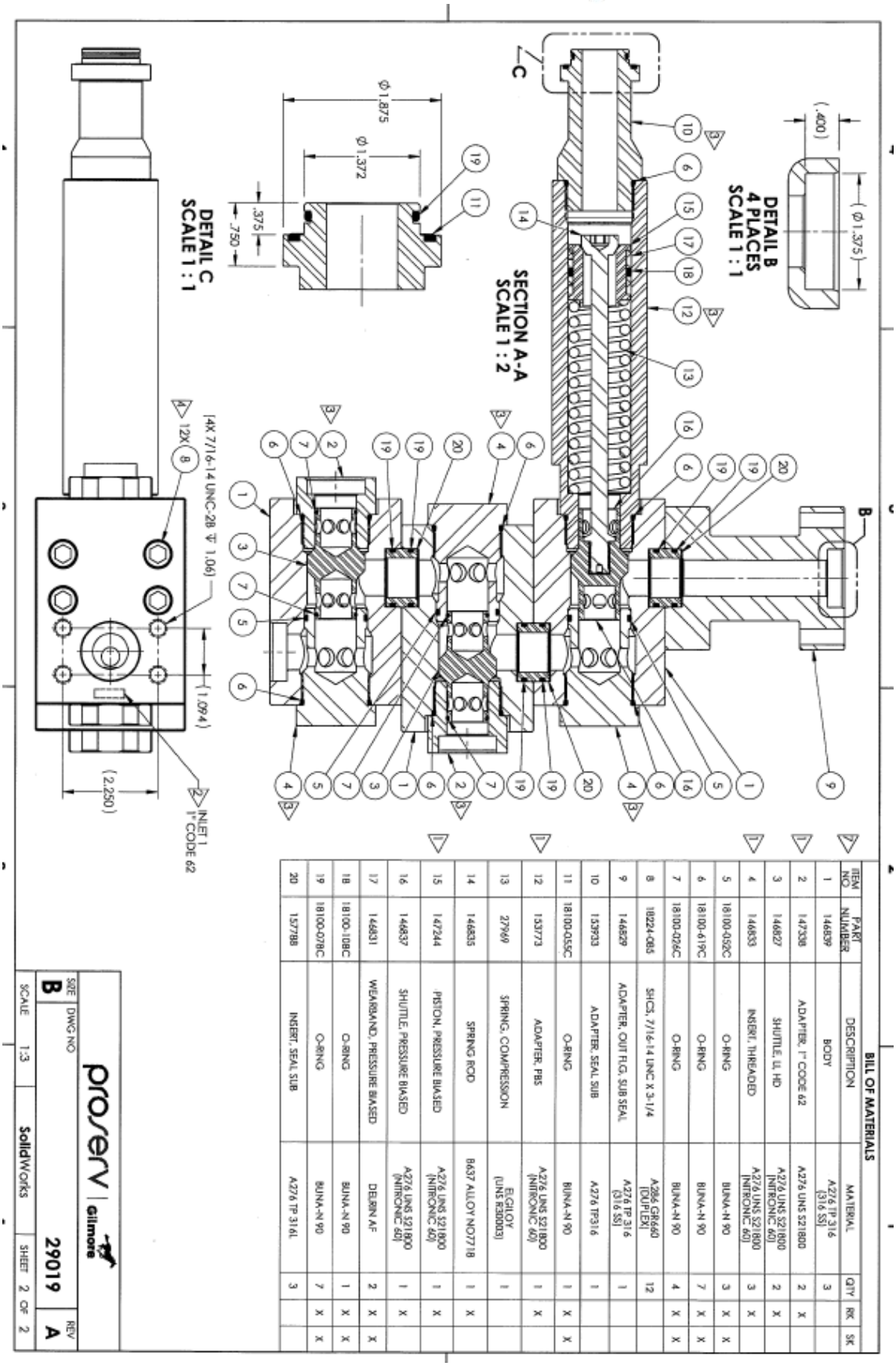

BILL OF MATERIALS

ITEM NO	PART NUMBER	DESCRIPTION	MATERIAL	QTY	RK	SK
1	146839	BODY	A276 TP 316 (316 SS)	3		
2	147338	ADAPTER, 1" CODE 62	A276 UNS S21800	2	X	
3	146827	SHUTTLE, UL HD	A276 UNS S21800 (NITRONIC 60)	2	X	
4	146833	INSERT, THREADED	A276 UNS S21800 (NITRONIC 60)	3	X	
5	18100-052C	O-RING	BUNA-N 90	3	X	X
6	18100-619C	O-RING	BUNA-N 90	7	X	X
7	18100-024C	O-RING	BUNA-N 90	4	X	X
8	18224-085	SHCS, 7/16-14 UNC X 3-1/4	A286 GR660 (DUPLEX)	12		
9	146829	ADAPTER, CUT FLG, SUB SEAL	A276 TP 316 (316 SS)	1		
10	153933	ADAPTER, SEAL SUB	A276 TP316	1		
11	18100-055C	O-RING	BUNA-N 90	1	X	X
12	153773	ADAPTER, PBS	A276 UNS S21800 (NITRONIC 60)	1	X	
13	27969	SPRING, COMPRESSION	B-CHLOY (UNS R30003)	1		
14	146835	SPRING ROD	B637 ALLOY NO7718	1	X	
15	147244	PISTON, PRESSURE BIASED	A276 UNS S21800 (NITRONIC 60)	1	X	
16	146837	SHUTTLE, PRESSURE BIASED	A276 UNS S21800 (NITRONIC 60)	1	X	
17	146831	WEARBAND, PRESSURE BIASED	DELRIN AF	2	X	X
18	18100-108C	O-RING	BUNA-N 90	1	X	X
19	18100-078C	O-RING	BUNA-N 90	7	X	X
20	157788	INSERT, SEAL SUB	A276 TP 316L	3		

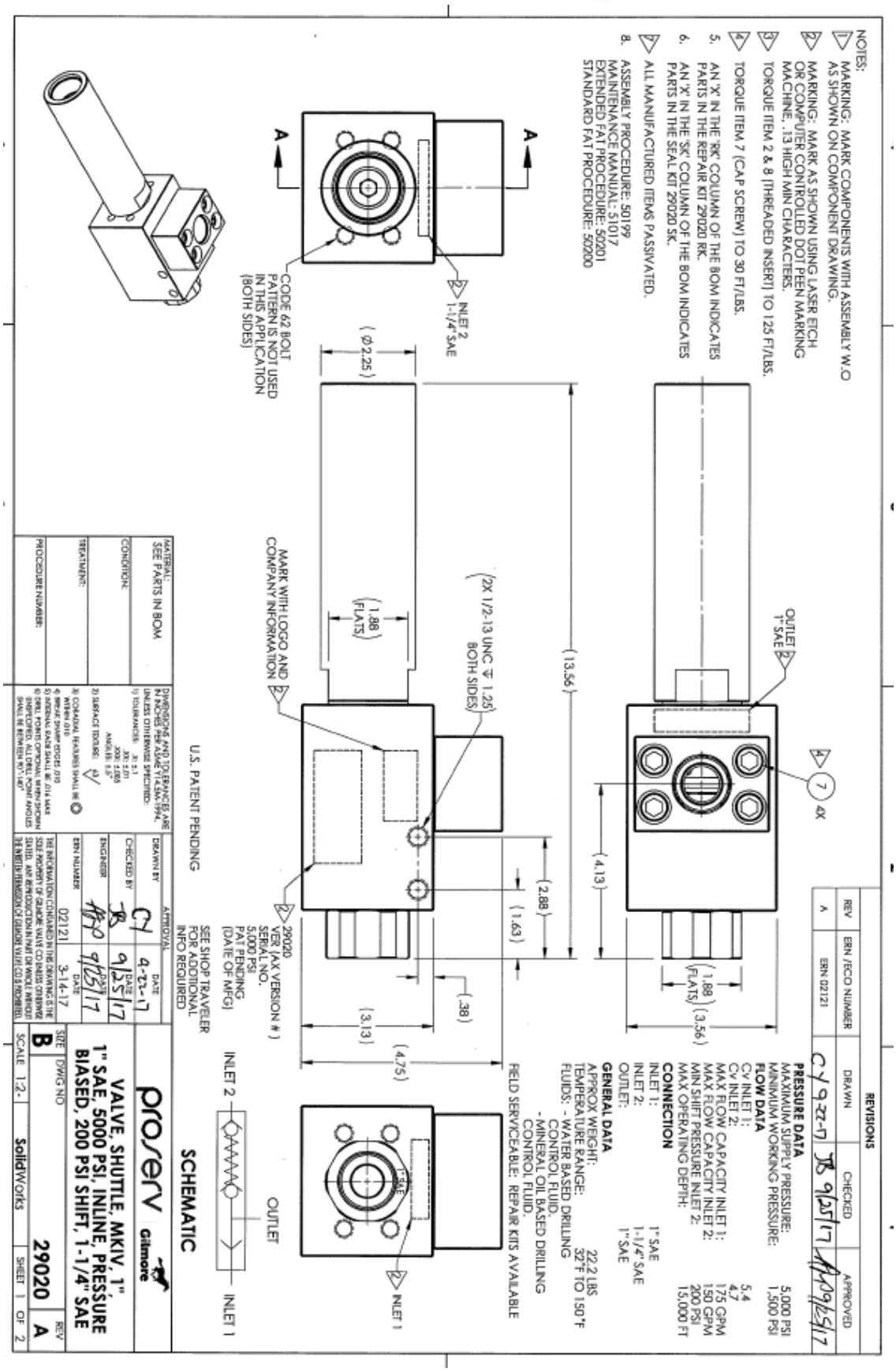
NOTES:
MARKING: MARK COMPONENTS WITH ASSEMBLY W.O AS SHOWN ON COMPONENT DRAWING.
MARKING: MARK AS SHOWN USING LASER ETCH OR COMPUTER CONTROLLED DOT PEEN MARKING MACHINE, .13 HIGH MIN CHARACTERS.
TORQUE ITEM 2 & 8 (THREADED INSERT) TO 125 FT/LBS.
TORQUE ITEM 7 (CAP SCREW) TO 30 FT/LBS.
5. AN 'X' IN THE 'RK' COLUMN OF THE BOM INDICATES PARTS IN THE REPAIR KIT 29020 RK.
6. AN 'X' IN THE 'SK' COLUMN OF THE BOM INDICATES PARTS IN THE SEAL KIT 29020 SK.
ALL MANUFACTURED ITEMS PASSIVATED.
8. ASSEMBLY PROCEDURE: 501199
MAINTENANCE MANUAL: 51017
EXTENDED FAT PROCEDURE: 50201
STANDARD FAT PROCEDURE: 50200
INLET 2
1-1/4" SAE
CODE 62 BOLT PATTERN IS NOT USED IN THIS APPLICATION (BOTH SIDES)
(Ø2.25)
(1.88 FLATS)
MARK WITH LOGO AND COMPANY INFORMATION
2X 1/2-13 UNC ↧ 1.25 BOTH SIDES
(13.56)
(2.88)
(1.63)
(.38)
(4.75)
(3.13)
29020
VER (AX VERSION #)
SERIAL NO.
5,000 PSI
PAT PENDING
(DATE OF MFG)
SEE SHOP TRAVELER FOR ADDITIONAL INFO REQUIRED
OUTLET
1" SAE
4X
(4.13)
(1.89 FLATS)
(3.56)
INLET 1
INLET 2
OUTLET
INLET 1
REVISIONS
REV
ERN /ECO NUMBER
DRAWN
CHECKED
APPROVED
A
ERN 02121
CY 9-22-17
JB 9/25/17
9/25/17
PRESSURE DATA
MAXIMUM SUPPLY PRESSURE: 5,000 PSI
MINIMUM WORKING PRESSURE: 1,500 PSI
FLOW DATA
CV INLET 1: 5.4
CV INLET 2: 4.7
MAX FLOW CAPACITY INLET 1: 175 GPM
MAX FLOW CAPACITY INLET 2: 150 GPM
MIN SHIFT PRESSURE INLET 2: 200 PSI
MAX OPERATING DEPTH: 15,000 FT
CONNECTION
INLET 1: 1" SAE
INLET 2: 1-1/4" SAE
OUTLET: 1" SAE
GENERAL DATA
APPROX WEIGHT: 22.2 LBS
TEMPERATURE RANGE: 32°F TO 150°F
FLUIDS: - WATER BASED DRILLING CONTROL FLUID.
- MINERAL OIL BASED DRILLING CONTROL FLUID.
FIELD SERVICEABLE: REPAIR KITS AVAILABLE
U.S. PATENT PENDING
SCHEMATIC
MATERIAL: SEE PARTS IN BOM
CONDITION:
TREATMENT:
PROCEDURE NUMBER:
DRAWN BY CY 9-22-17
CHECKED BY JB 9/25/17
ENGINEER 9/25/17
ERN NUMBER 02121
DATE 3-14-17
proserv Gilmore
VALVE, SHUTTLE, MKIV, 1" 1" SAE, 5000 PSI, INLINE, PRESSURE BIASED, 200 PSI SHIFT, 1-1/4" SAE
SIZE B
DWG NO 29020
REV A
SCALE 1:2
SolidWorks
SHEET 1 OF 2

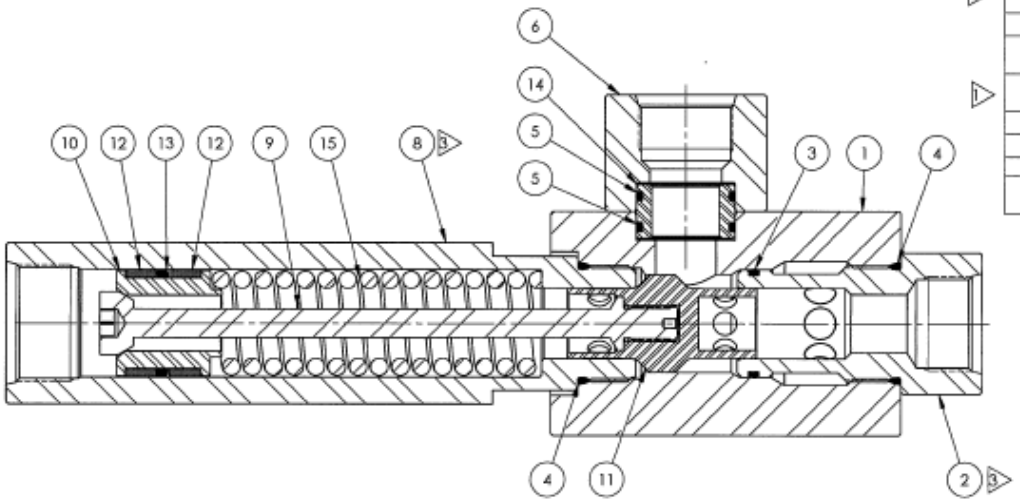

SECTION A-A
SCALE 1 : 1.5

BILL OF MATERIALS

ITEM NO	PART NUMBER	DESCRIPTION	MATERIAL	QTY	RK	SK
1	146825	BODY	A276 TP 316 (316 SS)	1		
2	147339	INSERT, THREADED, 1" SAE	A276 UNS S21800 (NITRONIC 60)	1	X	
3	18100-052C	O-RING	BUNA-N 90	1	X	X
4	18100-619C	O-RING	BUNA-N 90	2	X	X
5	18100-078C	O-RING	BUNA-N 90	2	X	X
6	153772	ADAPTER, OUTLET, 1" SAE	A276 TP 316L	1		
7	18224-014	SHCS, 7/16-14 UNC X 1.75	A286 GR660	4		
8	153773	ADAPTER, PBS	A276 UNS S21800 (NITRONIC 60)	1	X	
9	146835	SPRING ROD	B637 ALLOY NO7718	1	X	
10	147244	PISTON, PRESSURE BIASED	A276 UNS S21800 (NITRONIC 60)	1	X	
11	146837	SHUTTLE, PRESSURE BIASED	A276 UNS S21800 (NITRONIC 60)	1	X	
12	146831	WEARBAND, PRESSURE BIASED	DELRIN AF	2	X	X
13	18100-108C	O-RING	BUNA-N 90	1	X	X
14	157788	INSERT, SEAL SUB	A276 TP 316L	1		
15	27092	SPRING, COMPRESSION	A313 TP 316 (SS316)	1		

proserv | Gilmore

SIZE	DWG NO	REV
B	29020	A

SCALE 1:4 | SolidWorks | SHEET 2 OF 2